SIGN IS 10-FEET WIDE BY 6-FEET TALL AS INDICATED IN ASI-002. DISREGARD DIMENSIONS FOR OVERALL SIGN SIZE. DISREGARD INFORMATION HIGHLIGHTED IN GREY.

FOOTING INFORMATION IS ACCURATE.

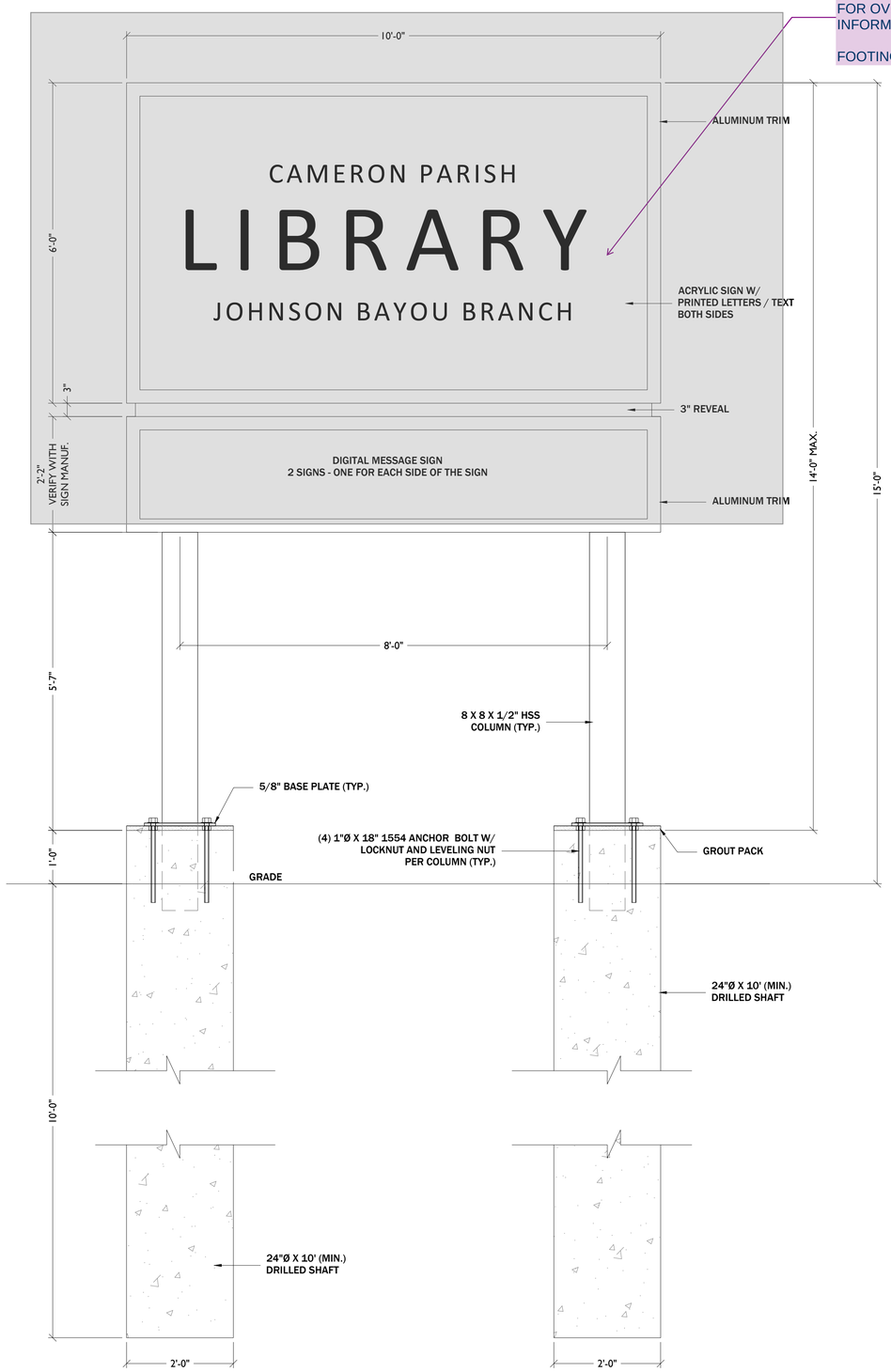

1 / 2 LIBRARY SIGN ELEVATION

SCALE: 3/4" = 1'-0"

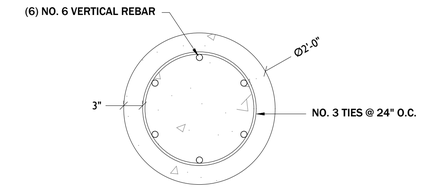

PLAN VIEW

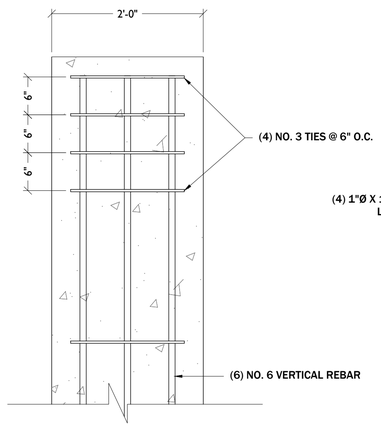

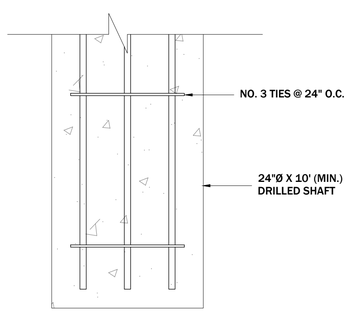

SECTION VIEW

2 / 2 DRILLED SHAFT DETAIL

SCALE: 1" = 1'-0"

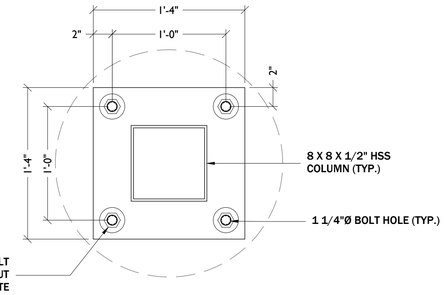

PLAN VIEW

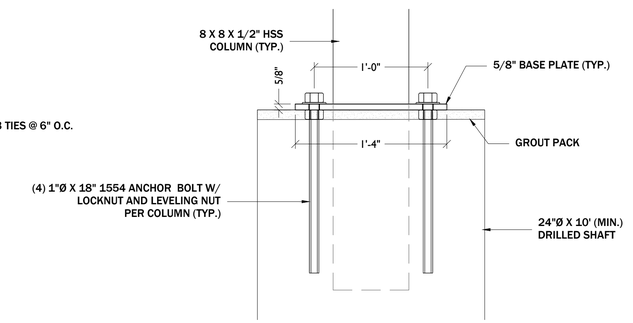

SECTION VIEW

3 / 2 BASE PLATE DETAIL

SCALE: 1-1/2" = 1'-0"

SK-001-ASI-004

20 December 2021

General Notes

SCALED FOR 22 X 34

STATE OF LOUISIANA
DAVID MINTON
License No. 36790
PROFESSIONAL ENGINEER
CIVIL ENGINEERING

CYPRESS ENGINEERING AND DEVELOPMENT GROUP, LLC

DAVID MINTON
LICENSEE NAME
36790
LICENSURE NUMBER

No.	Revisions	Date

Firm Name and Address:

THE CYPRESS GROUP
4310 RYAN ST. STE 122
LAKE CHARLES, LA
OFFICE - 337.504.7755
FAX - 337.504.7744

Project Name and Address:

LIBRARY SIGN

JOHNSON BAYOU BRANCH
CAMERON PARISH, LA

LIBRARY SIGN

Drawn By: C.G.S.
Project: 2021.167
Date: 12/13/2021
Scale: AS NOTED
Sheet 2